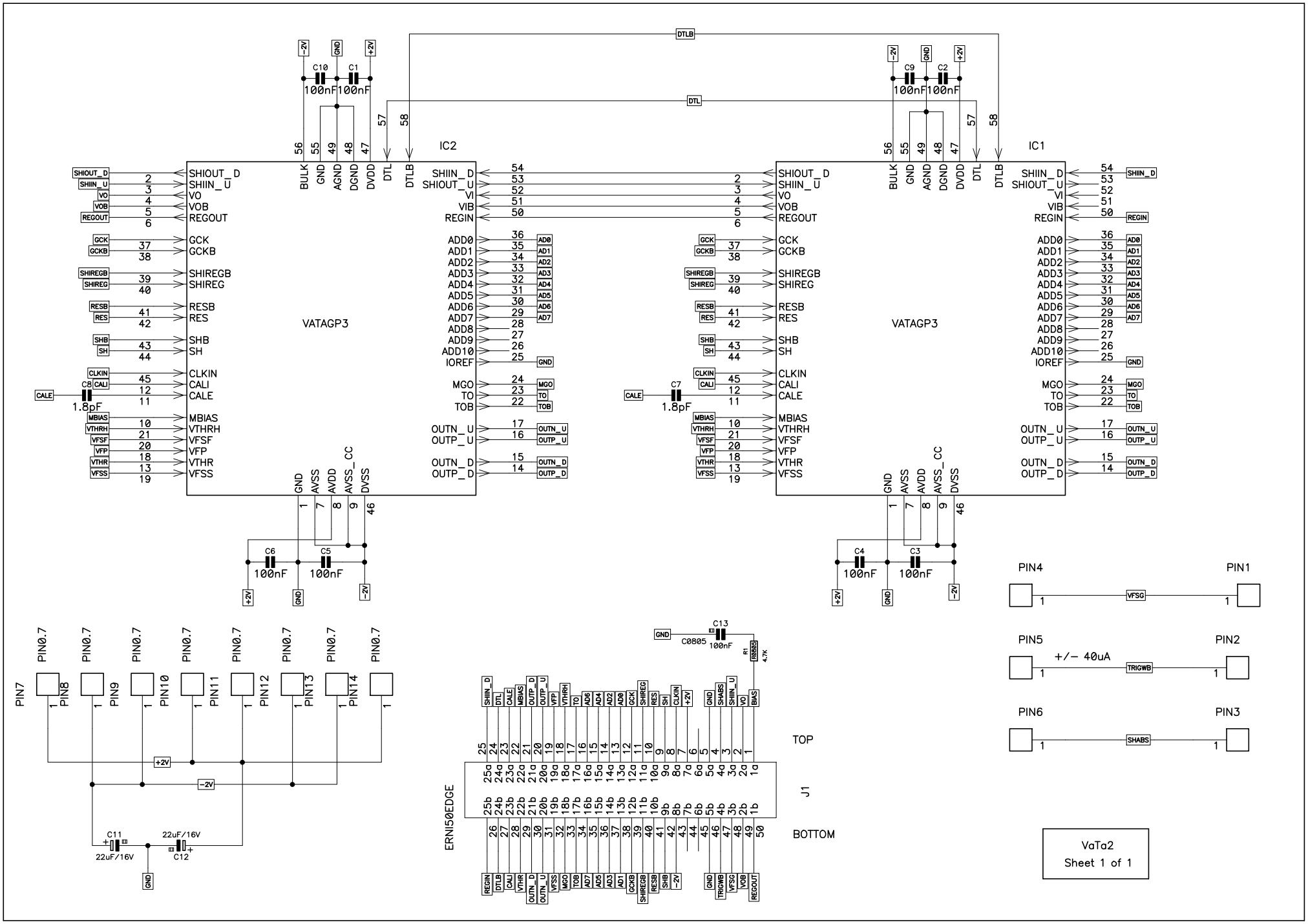
IC2
IC1
VATAGP3
VATAGP3
SHIOUT_D
SHIIN_U
VO
VOB
REGOUT
GCK
GCKB
SHIREGB
SHIREG
RESB
RES
SHB
SH
CLKIN
CALI
CALE
MBIAS
VTHRH
VFSF
VFP
VTHR
VFSS
BULK
GND
AGND
DGND
DVDD
DTL
DTLB
SHIIN_D
SHIOUT_U
VI
VIB
REGIN
ADD0
ADD1
ADD2
ADD3
ADD4
ADD5
ADD6
ADD7
ADD8
ADD9
ADD10
IOREF
MGO
TO
TOB
OUTN_U
OUTP_U
OUTN_D
OUTP_D
AVSS
AVDD
AVSS_CC
DVSS
C10 100nF
C1 100nF
C9 100nF
C2 100nF
C8 1.8pF
C7 1.8pF
C6 100nF
C5 100nF
C4 100nF
C3 100nF
PIN4
PIN1
VFSG
PIN5
PIN2
+/- 40uA
TRIGWB
PIN6
PIN3
SHABS
PIN7
PIN8
PIN9
PIN10
PIN11
PIN12
PIN13
PIN14
PIN0.7
C11 22uF/16V
C12 22uF/16V
C13 C0805 100nF
R1 R0805 4.7K
ERNI50EDGE
J1
TOP
BOTTOM
VaTa2
Sheet 1 of 1